WIRING THE BELTROL AL-10r with DALLEE sound.
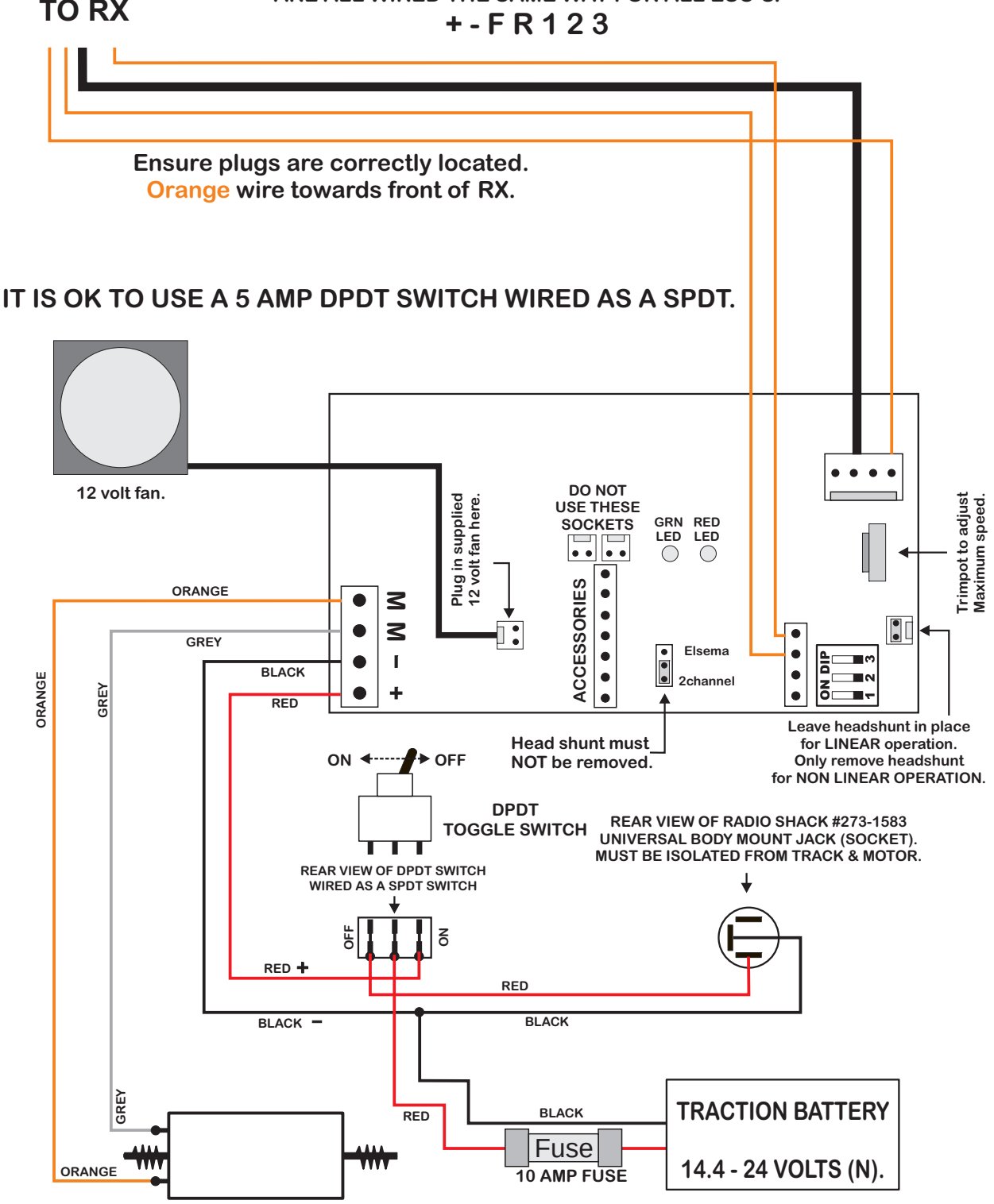
PLEASE NOTE. THE LIGHTING OUTPUTS & SOUND TRIGGERS ARE ALL WIRED THE SAME WAY FOR ALL ESC'S.